AND8014/D

EPT SPICE Modeling Kit

Prepared by
Paul Shockman
ON Semiconductor Logic Applications Engineering

ON Semiconductor
Formerly a Division of Motorola
http://onsemi.com

APPLICATION NOTE

Objective

The objective of this kit is to provide customers with enough schematic and SPICE parameter information to perform system level interconnect modeling with the ON Semiconductor ECLinPS Plus™ Translator EPT family. The EPT devices MC100EPT2xD are single or dual supply 1 or 2 Bit translators between the TTL and ECL/PECL worlds. Single supply devices translate between TTL and PECL, dual supply devices translate to or from negative supplied ECL. All devices are designed as 100K compatible 100EPT2x.

The kit contains representative schematics and model files for the I/O circuits used by the EPT20 and EPT22 devices. The package model should be placed on all external inputs, outputs and supply pins.

Input and Output Schematics

The TTL–PECL Translator function uses circuit schematics LVTTL01 and LVTTL02 for references diagrams to the SPICE netlists.

All inputs and outputs of the ELT family are protected by ESD protection circuitry. The ESD circuit, IN_ESD, is used for TTL Input and OUT_ESD for PECL outputs.

If the user would like to just simulate the output behavior of an TTL output the TTL_OUT circuit can be stimulated with internal signals.

To all external pins the package model, LINES, needs to be added. If users want to reduce simulation time and just simulate 1 channel or only the output of a circuit, they need to take care of the correct power supply management. The channels share power supply pins. Dynamic ICC current will add up at power pins. When a simulation is performed with only one channel, the package models of the power pins need to be adjusted. The parasitic capacitance and inductance should be adjusted accordingly.

Modeling

The bias driver schematics for VCS and V1 generation are not included in this kit, as they are unnecessary for interconnection simulation. In addition their use would result in a relatively large in simulation time. Alternatively the internal reference voltages should be driven with ideal constant voltage sources.

Parameter	Typical Level	Worst Case
VCS	VEE+1.3V	±50mV
V1	VEE+2.1V	±50mV

This model kit is intended for simulations within the specified power supply range. If supply voltages drop below minimum specification, VCS and V1 can no longer be assumed to be constant. Thus, this model kit can not be used for power up or power down simulations. The 10K ohm resistor should NOT be simulated as simple SPICE resistor because it is fabricated by a diffusion step in wafer processing and there is an associated parasitic. The following subcircuit should be used to enhance the performance of the simulation.

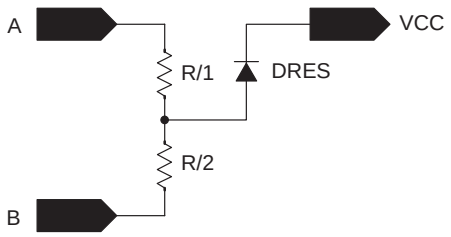

Figure 1. Resistor Model

January, 2000 – Rev. 0
Publication Order Number:
AND8014/D

```
.SUBCKT RESK A B VCC params: R=10000
* Assumes Sheet Rho=500OHM, Resistor Width=10U, and Cap in Farads.
Ra A 1 {R/2} TC=900U
Rb 1 B {R/2} TC=900U
D1 1 VCC DRES
.MODEL DRES D
+ (IS=3.7E–16
+ CJO=0.265E–16*R+29E–16)
.ENDS RESK
```

The nodes in the model files and the schematics are:

Name	Node	Description
VCC	100	3.3V High rail power supply
VEE	200	0.0V Lowest Rail Power supply
VCS	300	1.24 Current Source Base Voltage (VEE+1.3V)V
V1	400	2.1 Internal TTL Transfer Reference Supply
VTT	500	1.3V External termination sink supply (VCC—2V)
VIN	51	PULSE (.8 to 2.0, tr/tf 5NS, PW 20NS, PER 50NS)

Temperature coefficients are annotated (* TC=).

For typical load ECL and PECL outputs should be terminated 50ohm to VTT=VCC—2V. TTL outputs are loaded with 20pF to GROUND and 500OHM to GROUND.

***

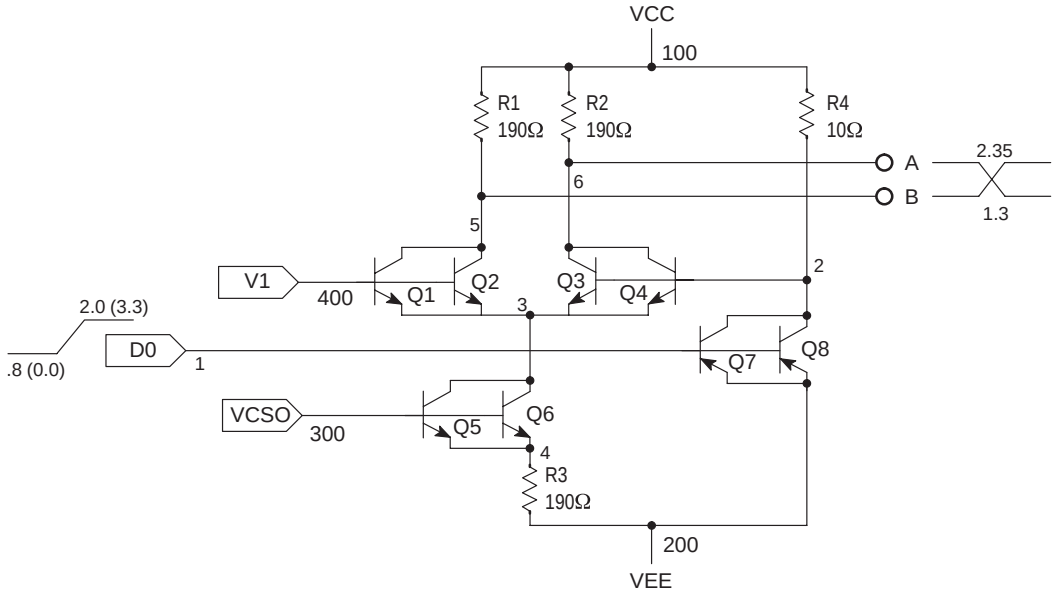

Figure 2. LVTTL–LVPECL Translator
EPT20/22
LVPECL output

For LVTTL01, the following transitors are used:

```
Q1   TRANA
Q2   TRANA
Q3   TRANA
Q4   TRANA
Q5   TRANA
Q6   TRANA
Q7   TRANE
Q8   TRANE
```

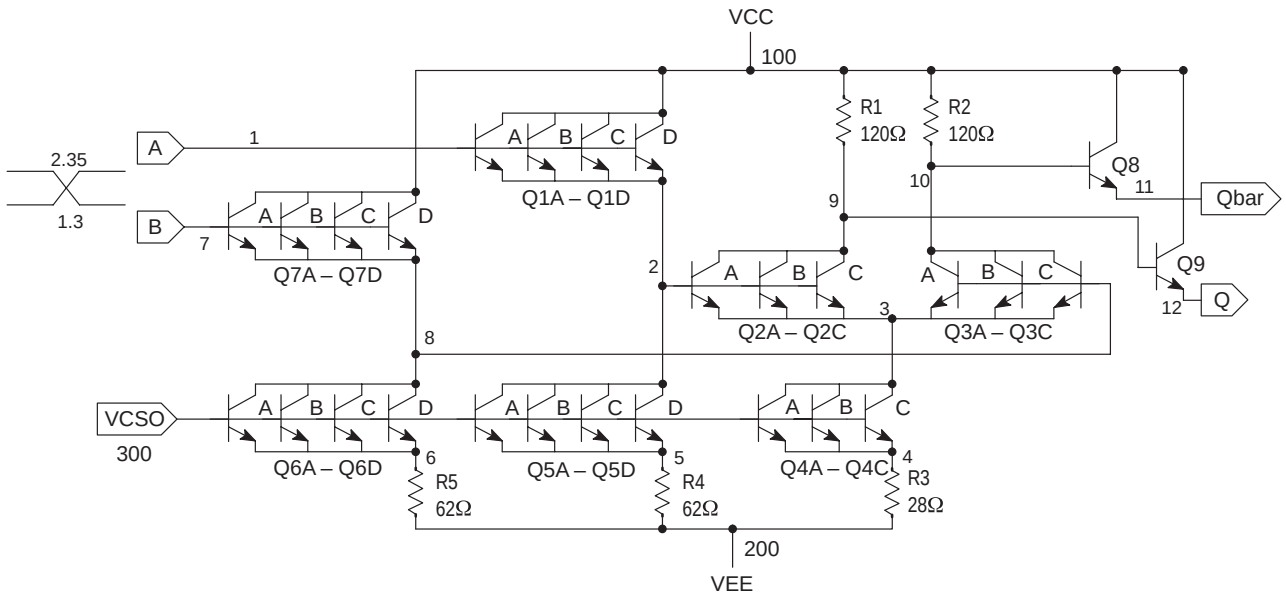

Figure 3. LVTTL–LVPECL Translator
EPT20/22
LVPECL output

For LVTTL02 the following transitors are used:

```
Q1A–D  TRANA
Q2A–C  TRANB
Q3A–C  TRANB
Q4A–C  TRANB
Q5A–D  TRANA
Q6A–D  TRANA
Q7A–D  TRANA
Q8     TRAND
Q9     TRAND
```

```
.TRAN     0.2NS  120NS
XLVTTL01  100    200   300   400     1       5    6   LVTTL01
XLVTTL02  100    200   300   5       6       11   12  LVTTL02
XINESD    100    200   51    1       IN_ESD
XOUTESD   100    200   11    OUT_ESD
XOUTESDB  100    200   12    OUT_ESD
XQBTERM   500    12    RTERM
XQTERM    500    11    RTERM
```

```
.SUBCKT LVTTL01 100 200 300 400 1 5 6
Q1  5    400 3   200  TRANA
Q2  5    400 3   200  TRANA
Q3  6    2   3   200  TRANA
Q4  6    2   3   200  TRANA
Q5  3    300 4   200  TRANA
Q6  3    300 4   200  TRANA
Q7  2    1   200 200  TLS
Q8  2    1   200 200  TLS
R1  100  5   190
* TC=0.26M, 0.9U
R2  100  6   190
```

```
* TC=0.26M, 0.9U
R3  4    200 190
* TC=0.26M, 0.9U
R4  100  2   10000
* TC=0.26M, 0.9U
.ENDS LVTTL01

.SUBCKT LVTTL02 100 200 300 1 7  11 12
Q1A  100   1  2  200 TRANA
Q1B  100   1  2  200 TRANA
Q1C  100   1  2  200 TRANA
Q1D  100   1  2  200 TRANA
Q2A    9   2   3 200  TRANB
Q2B    9   2   3 200  TRANC
Q2C    9   2   3 200  TRANC
Q3A   10   8   3 200  TRANB
Q3B   10   8   3 200  TRANC
Q3C   10   8   3 200  TRANC
Q4A    3  300  4 200  TRANB
Q4B    3  300  4 200  TRANB
Q4C    3  300  4 200  TRANB
Q5A    2  300  5 200  TRANA
Q5B    2  300  5 200  TRANA
Q5C    2  300  5 200  TRANA
Q5D    2  300  5 200  TRANA
Q6A    8  300  6 200  TRANA
Q6B    8  300  6 200  TRANA
Q6C    8  300  6 200  TRANA
Q6D    8  300  6 200  TRANA
Q7A  100   7   8 200  TRANA
Q7B  100   7   8 200  TRANA
Q7C  100   7   8 200  TRANA
Q7D  100   7   8  200  TRANA
Q8   100  10   11 200  TRAND
Q9   100   9   12 200  TRAND
R1   100   9   120
* TC=0.26M, 0.9U
R2   100  10   120
* TC=0.26M, 0.9U
R3     4  200  28
*  TC=0.26M, 0.9U
R4     5  200  62
*  TC=0.26M, 0.9U
R5     6  200  62
*  TC=0.26M, 0.9U
.ENDS LVTTL02

* INPUT ESD   51 = in, 61 out
.SUBCKT IN_ESD 100 200 51 61
D1      51      100     ES14X19M
D2      51      100     ES14X19M
D3      51      100     ES14X19M
D4      200     51      ES14X19M
D5      200     51      ES14X19S
D6      200     51      ES14X19M
D7      200     51      ES14X19S
D8      200     51      ES14X19M
D9      200     51      ES14X19S
RB1     51  61  1000
*     TC=0.26M, 0.9U
.ENDS IN_ESD
```

```
* OUTPUT ESD
.SUBCKT OUT_ESD  100  200 81
D1      81      100     ES14X19M
D2      81      100     ES14X19M
D3      200     81      ES14X19M
D4      200     81      ES14X19S
D5      200     81      ES14X19M
D6      200     81      ES14X19S
.ENDS OUT_ESD


.SUBCKT RTERM    500   91
R1  91 500 50
.ENDS

.END

.MODEL TRANA NPN (IS=8.12E–18 BF=192 NF=1 VAF=75.6 IKF=1.49E–02
+ ISE=9.14E–17 NE=2 BR=15.8 VAR=2.76 IKR=2.2E–03 ISC=2.62E–16
+ NC=1.578 RB=327 IRB=4.8E–05 RBM=0.001 RE=10 RC=15 CJE=2.0E–14
+ VJE=.8867 MJE=.2868 TF=9.02E–12 ITF=7.6E–03 XTF=2.8 VTF=3.4 PTF=41.56 TR=1NS
+ CJC=5.6E–15 VJC=.6324 MJC=.3006 XCJC=.3 CJS=4.8E–15 VJS=.4193 MJS=.2563
+ EG=1.119 XTI=3.999 XTB=0.8826 FC=0.9)


.MODEL TRANC NPN (IS=1.36E–17 BF=180 NF=1 VAF=87.6 IKF=2.19E–02
+ ISE=6.65E–16 NE=2 BR=16.9 VAR=2.76 IKR=1.5E–03 ISC=1.11E–16
+ NC=1.578 RB=136 IRB=3.24E–05 RBM=0.001 RE=6 RC=8 CJE=1.02E–13
+ VJE=.8867 MJE=.2868 TF=9.02E–12 ITF=1.27E–02 XTF=2.8 VTF=3.4 PTF=41.56 TR=1NS
+ CJC=10.3E–15 VJC=.6324 MJC=.3006 XCJC=.3 CJS=9.94E–15 VJS=.4193 MJS=.2563
+ EG=1.119 XTI=3.999 XTB=0.8826 FC=0.9)


.MODEL TRAND NPN (IS=6.55E–17 BF=103 NF=1 VAF=90 IKF=2.91E–01
+ ISE=8.85E–15 NE=2 BR=15.7 NR=1 VAR=3.82 IKR=2.01E–02 ISC=1.48E–15
+ NC=2 RB=10.5 IRB=4.39E–04 RBM=0.29 RE=0.351 RC=9 CJE=3.5E–13
+ VJE=.8167 MJE=.1973 TF=8.99E–12 ITF=1.3E–01 XTF=5.67 VTF=1.86 PTF=41.43 TR=6.405E–10
+ CJC=1.4E–13 VJC=.6401 MJC=.2674 XCJC=1 CJS=9.3E–14 VJS=.5002 MJS=.1706
+ EG=1.135 XTI=4.177 XTB=0.6322 FC=0.961)


.MODEL TRANB NPN (IS=2.71E–17 BF=172 NF=1 VAF=71.4 IKF=4.38E–02
+ ISE=1.33E–15 NE=2 BR=17.9 VAR=2.76 IKR=3.0E–03 ISC=2.22E–16
+ NC=1.578 RB=67 IRB=6.47E–05 RBM=0.001 RE=3 RC=4 CJE=5.09E–14
+ VJE=.8867 MJE=.2868 TF=9.02E–12 ITF=2.53E–02 XTF=2.8 VTF=3.4 PTF=41.56 TR=1NS
+ CJC=20.6E–15 VJC=.6324 MJC=.3006 XCJC=.3 CJS=1.7E–14 VJS=.4193 MJS=.2563
+ EG=1.119 XTI=3.999 XTB=0.8826 FC=0.9)


.MODEL TRANEPNP (IS=1.65e–17 BF=210 NF=1 VAF=7.5 IKF=6.51e–05
+ ISE=7.75e–17 NE=1.813 BR=210 VAR=5.68 IKR=6.51e–05 ISC=7.75e–17
+ NC=1.813 RB=349 IRB=1.77e–07 RBM=53 RE=119 RC=158 CJE=7.04e–15
+ VJE=0.6578 MJE=0.149 TF=6.33e–10 ITF=2.2e–08 XTF=2.8 VTF=1.4
+ PTF=41.56 TR=1e–9 CJC=7.04e–15 VJC=0.8034 MJC=0.1773 XCJC=.3
+ CJS=4.79e–15 VJS=.4193 MJS=0.0902
+ EG=1.158 XTI=2.015 XTB=0.1208 FC=0.9)


.MODEL TLS LPNP (IS=1.65e–17 BF=210 NF=1 VAF=7.5 IKF=6.51e–05
+ ISE=7.75e–17 NE=1.813 BR=210.1 NR=1 VAR=5.68 IKR=2.61e–04 ISC=7.75e–17
+ NC=1.813 RB=349 IRB=1.8e–07 RBM=53 RE=119 RC=158 CJE=7.0e–15
+ VJE=.6578 MJE=.149 TF=6.33e–10 ITF=2.2e–08 XTF=.5356 VTF=.2365 PTF=0 TR=6.33e–10
+ CJC=7.0e–15 VJC=.8034 MJC=.1773 XCJC=1 CJS=4.8e–15 VJS=.5 MJS=.09022
+ EG=1.158 XTI=2.015 XTB=0.1208 FC=0.9)
```

```
.MODEL ES14X19M D (IS=1.55E–14 CJO=160FF RS=12 VJ=.58 M=.25 BV=9)


.MODEL ES14X19S D (IS=1.55E–14 CJO=29FF VJ=.624 M=.571)
.END


* PACKAGE: 8SOIC
* SPICE SUBCIRCUIT FILE OF COUPLED TRANSMISSION LINES
* CREATED FRI APR 25 16:47:54 1997
* BY PMG VERSION 3.6.2
*
* TRANSMISSION LINE MODEL
*   CONDUCTOR     PIN
*       1           1
*       2           2
*       3           3
*       4           4
*       5           5
*       6           6
*       7           7
*       8           8
*
* NUMBER OF LUMPS:      1
* FASTEST APPLICABLE EDGE RATE:         0.076 NS
* CONNECT CHIP SIDE TO N**I AND BOARD SIDE TO N**O
*
.SUBCKT LINES N01I N01O N02I N02O N03I N03O N04I N04O
+ N05I N05O N06I N06O N07I N07O N08I N08O
L01WB   N01I    N01M    1.367E–09
L01     N01M    N01O    7.794E–10
C01     N01M    0       2.445E–13
L02WB   N02I    N02M    1.287E–09
L02     N02M    N02O    5.473E–10
C02     N02M    0       1.888E–13
L03WB   N03I    N03M    1.287E–09
L03     N03M    N03O    5.473E–10
C03     N03M    0       1.901E–13
L04WB   N04I    N04M    1.367E–09
L04     N04M    N04O    7.723E–10
C04     N04M    0       2.443E–13
L05WB   N05I    N05M    1.367E–09
L05     N05M    N05O    7.710E–10
C05     N05M    0       2.478E–13
L06WB   N06I    N06M    1.287E–09
L06     N06M    N06O    5.489E–10
C06     N06M    0       1.916E–13
L07WB   N07I    N07M    1.287E–09
L07     N07M    N07O    5.495E–10
C07     N07M    0       1.930E–13
L08WB   N08I    N08M    1.367E–09
L08     N08M    N08O    7.786E–10
C08     N08M    0       2.451E–13
K0102   L01     L02     0.1687
K0102WB L01WB   L02WB   0.3400
C0102   N01O    N02O    3.674E–14
K0103   L01     L03     0.0702
K0103WB L01WB   L03WB   0.1847
K0203   L02     L03     0.1822
K0203WB L02WB   L03WB   0.3505
C0203   N02O    N03O    3.521E–14
K0204   L02     L04     0.0682
K0204WB L02WB   L04WB   0.1847
```

```
K0304   L03     L04     0.1694
K0304WB L03WB   L04WB   0.3400
C0304   N03O    N04O    3.675E–14
K0305WB L03WB   L05WB   0.1847
K0405WB L04WB   L05WB   0.3455
K0406WB L04WB   L06WB   0.1847
K0506   L05     L06     0.1697
K0506WB L05WB   L06WB   0.3400
C0506   N05O    N06O    3.720E–14
K0507   L05     L07     0.0682
K0507WB L05WB   L07WB   0.1847
K0607   L06     L07     0.1824
K0607WB L06WB   L07WB   0.3505
C0607   N06O    N07O    3.570E–14
K0608   L06     L08     0.0702
K0608WB L06WB   L08WB   0.1847
K0708   L07     L08     0.1691
K0708WB L07WB   L08WB   0.3400
C0708   N07O    N08O    3.632E–14
.ENDS LINES
```

ECLinPS Plus is a trademark of Semiconductor Components Industries, LLC.

PUBLICATION ORDERING INFORMATION

North America Literature Fulfillment:
Literature Distribution Center for ON Semiconductor
P.O. Box 5163, Denver, Colorado 80217 USA
Phone: 303–675–2175 or 800–344–3860 Toll Free USA/Canada
Fax: 303–675–2176 or 800–344–3867 Toll Free USA/Canada
Email: ONlit@hibbertco.com

N. American Technical Support: 800–282–9855 Toll Free USA/Canada

EUROPE: LDC for ON Semiconductor – European Support
German **Phone:** (+1) 303–308–7140 (M–F 2:30pm to 5:00pm Munich Time)
Email: ONlit–german@hibbertco.com
French **Phone:** (+1) 303–308–7141 (M–F 2:30pm to 5:00pm Toulouse Time)
Email: ONlit–french@hibbertco.com
English **Phone:** (+1) 303–308–7142 (M–F 1:30pm to 5:00pm UK Time)
Email: ONlit@hibbertco.com

ASIA/PACIFIC: LDC for ON Semiconductor – Asia Support
Phone: 303–675–2121 (Tue–Fri 9:00am to 1:00pm, Hong Kong Time)
Toll Free from Hong Kong 800–4422–3781
Email: ONlit–asia@hibbertco.com

JAPAN: ON Semiconductor, Japan Customer Focus Center
4–32–1 Nishi–Gotanda, Shinagawa–ku, Tokyo, Japan 141–8549
Phone: 81–3–5740–2745
Email: r14525@onsemi.com

Fax Response Line: 303–675–2167
800–344–3810 Toll Free USA/Canada

ON Semiconductor Website: http://onsemi.com

For additional information, please contact your local
Sales Representative.